REVISIONS				
ZONE	REV	DESCRIPTION	DATE	APPROVED
	C	REDRAWN	06MAY97	

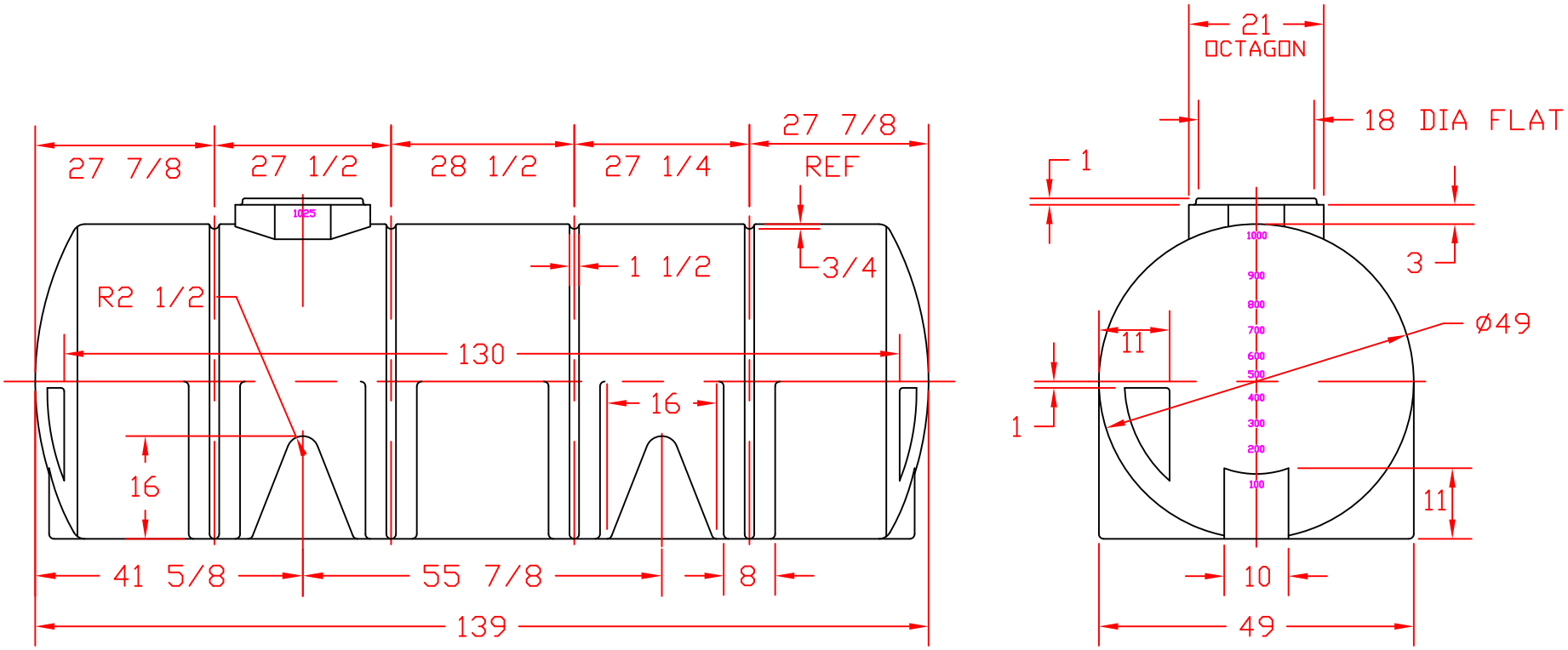

NORWESCO
ST. BONIFACIUS, MN

1025 GALLON HORIZONTAL STORAGE TANK

JTP 06MAY97	SIZE A	FSCM NO.	DWG NO.	REV C
	SCALE 1/24		SHEET	

REVISIONS				
ZONE	REV	DESCRIPTION	DATE	APPROVED
	D	REDRAWN, SPARGER REV'D	05MAY01	

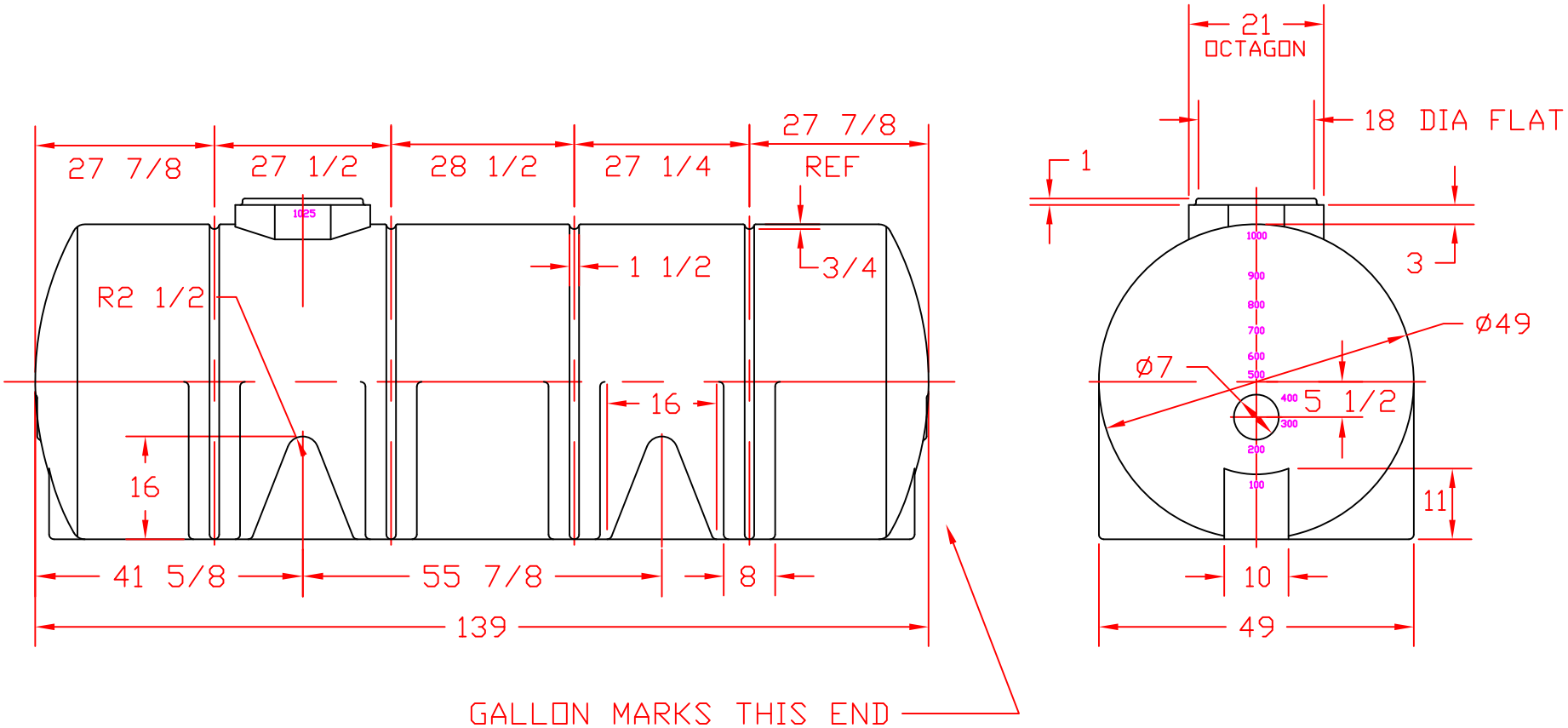

FOB GRIFFIN, GA FAIRFIELD, TX

NORWESCO
ST. BONIFACIUS, MN

1025 GALLON HORIZONTAL STORAGE TANK

JTP 05MAY01	SIZE A	FSCM NO.	DWG NO.	REV D
	SCALE 1/24		SHEET	